2016 Master Plan Reexamination

Prepared for:

Seaside Park Borough, Ocean County
New Jersey

Adopted
July 26, 2016

Prepared By:

CME ASSOCIATES

1460 Route 9 South
Howell, New Jersey 07731
(732) 462-7400

Jennifer C. Beahm, PP, AICP
License No. 5625

Megan J. Stanley, PP, AICP
License No. 6278

2016 Governing Body

Robert Matthies- *Mayor*
Michael Tierney
Gail Coleman
Nancy Koury
Jean Contessa
Faith Liguori
Frank McHugh

2016 Planning Board

Salvatore Mattia- *Chairman*
Michael Giuliano- *Vice Chairman*
Robert Matthies- *Mayor*
Francis Larkin- *Police Chief*
Nancy Koury- *Council Member*
Frank Losey- *Class IV*
Thomas Mianulli- *Class IV*
Anthony DiCaro- *Class IV*
Martin Wilk, Jr. - *Class IV*
Jack Moyse- *Alternate*
Dominick Bucci- *Alternate*

Gregory Hock, Esq.- *Board Attorney*
Douglas Rohmeyer, PE - *Board Engineer*
Susan Connor- *Board Administrative Support*

Contents

EXECUTIVE SUMMARY 1
INTRODUCTION 2
MAJOR PROBLEMS AND OBJECTIVES RELATING TO LAND DEVELOPMENT AT THE TIME OF ADOPTION OF THE LAST MASTER PLAN 4
- Land Use and Density 4
- Circulation 5
- Municipal Facilities and Services 6
- Natural Resources/ Environmental Protection 7
- Economic Development 7
- Housing 8
- Parks, Recreation, and Open Space 8
- Character and Design 8
- Recycling 8

EXTENT TO WHICH PROBLEMS HAVE BEEN REDUCED OR INCREASED 9
- Land Use and Density 9
- Circulation 10
- Municipal Facilities and Services 10
- Natural Resources and Environmental Protection 11
- Economic Development 11
- Housing 11
- Parks, Recreation, and Open Space 12
- Character and Design 12
- Recycling 12

SIGNIFICANT CHANGES IN ASSUMPTIONS, POLICIES AND OBJECTIVES FORMING THE BASIS FOR THE MASTER PLAN OR DEVELOPMENT REGULATIONS SINCE THE 2008 MASTER PLAN 13
- Seaside Park Elementary School Closing 13
- Superstorm Sandy 13
- Update to Affordable Housing Legislation 15
- Demographic Characteristics 16
- Employment Characteristics 18
- Housing Characteristics 20
- Analysis of Housing Units 20
- Cost of Housing Stock 21

SPECIFIC CHANGES RECOMMENDED FOR THE MASTER PLAN AND/OR DEVELOPMENT REGULATIONS 23
- Comprehensive Goals 23
- Comprehensive Objectives 24
- Specific Goals 24
- Recommendations 25

RECOMMENDATIONS OF THE PLANNING BOARD CONCERNING THE INCORPORATION OF REDEVELOPMENT PLANS INTO THE LAND USE ELEMENT AND LOCAL DEVELOPMENT REGULATIONS 28
Appendix A: Proposed Boardwalk Form Based Code 29
Appendix B: Recommended Revisions for Mixed Use and Business Zones 43
Appendix C: Example Fertilizer Ordinance 47

EXECUTIVE SUMMARY

The Borough of Seaside Park is a small, 0.77 square mile, town located on the Barnegat Barrier Island in Ocean County. With approximately two (2) miles of shoreline along the Atlantic Ocean, Seaside Park's economy is driven by summer beach tourism.

When Superstorm Sandy hit the northeastern United States in October of 2012, Seaside Park was one of the many coastal towns to be heavily affected. High winds and precipitation, as well as the overflowing ocean, bays, and rivers, caused direct damage to homes, businesses and town facilities. Tidal surges caused flooding and excessive damage to coastal protective barriers including dunes, bulk heads, and jetties.In order to aid municipalities that were affected by the Storm the New Jersey Department of Community Affairs allocated funding in Community Development Block Grant- Disaster Recovery (CDGB-DR) funds towards the Post Sandy Planning Assistance Grant Program (PSPAG). In 2014, the Borough of Seaside Park received $30,000.00 in PSPAG funding to prepare a Strategic Recovery Planning Report (SRPR). The SRPR evaluated the Borough's damages from Superstorm Sandy and identified vulnerabilities to future natural disasters as well. The SRPR further recommended a number of planning projects for the Borough to undertake which would allow Seaside Park to evaluate current planning policies and documents in light of lessons learned from Sandy.

Upon adoption of the SRPR, the Borough received Second Round funding through the PSPAG program for the preparation of this Master Plan Reexamination. The intent of the Master Plan Reexam is to determine the necessary changes in the Borough's planning policies in order to mitigate damage from future storms and reduce future loss to both public and private assets.

INTRODUCTION

The municipal Master Plan is a document that establishes the policies for land development and redevelopment for a municipality. It is the principal document concerning land use, and guides both public and private development in making decisions regarding land use. The Master Plan forms the legal foundation for the zoning ordinance and zoning map. The zoning ordinance and map constitute the primary law governing the use of land at the municipal or local level.

A Reexamination Report is a review of previously adopted master plans, amendments, and local development regulations to determine if the policy guidelines set forth herein are still applicable. The Borough of Seaside Park Master Plan was last adopted in 2008. Although the New Jersey Municipal Land Use Law (MLUL), N.J.S.A. 40:55D-89, requires municipalities to reexamine the master plan every ten (10) years, damages incurred from Superstorm Sandy in 2012 has brought forward a need to review the Borough's policies in relation to emergency management, resiliency, and disaster recovery.

The findings and recommendations of contained in the Reexamination are based upon the review of the following documents:

- Seaside Park Borough 2008 Master Plan, T&M Associates;
- Seaside Park Borough Land Use Ordinance;
- 2014 Strategic Recovery Planning Report, CME Associates;
- 2010 US Census Data; and
- 2013 American Community Survey.

The governing body shall, at least every ten years, provide for a general re-examination of its master plan and development regulations by the planning board. The Re-examination Report shall state:

a. The major problems and objectives relating to land development in the municipality at the time of the adoption of the last re-examination report.

b. The extent to which such problems and objectives have been reduced or have increased subsequent to such date.

c. The extent to which there have been significant changes in the assumptions, policies, and objectives forming the basis for the master plan or development regulations as last revised, with particular regard to the density and distribution of population and land uses, housing conditions, circulation, conservation of natural resources, energy conservation, collection, disposition, and recycling of designated recyclable materials, and changes in State, county and municipal policies and objectives.

d. The specific changes recommended for the master plan or development regulations, if any, including underlying objectives, policies and standards, or whether a new plan or regulations should be prepared.

e. The recommendations of the planning board concerning the incorporation of redevelopment plans adopted pursuant to the "Local Redevelopment and Housing Law," P.L.1992, c.79 (C.40A:12A-1 et al.) into the land use plan element of the municipal master plan, and recommended changes, if any, in the local development regulations necessary to effectuate the redevelopment plans of the municipality.

MAJOR PROBLEMS AND OBJECTIVES RELATING TO LAND DEVELOPMENT AT THE TIME OF ADOPTION OF THE LAST MASTER PLAN

The first provision of N.J.S.A. 40:55D-89 of the MLUL states that the Re-examination Report shall include:

> ***"The major problems and objectives relating to land development in the municipality at the time of the adoption of the last re-examination report."***

The 2008 Master Plan identified the following list of goals and objectives to guide the future growth and development of the Borough:

Land Use and Density

1. Provide for the future use of the Boardwalk area to achieve the Community Vision for a safe, clean, and quiet environment.
    a. Consider commercial alternatives within the private sector of the boardwalk that are compatible with the adjacent residential areas and contribute to the economic will being of the Borough.
    b. Reduce the conflicts between the businesses in the area and the adjacent residential area to address the long term quality-of-life issues in accordance with the Borough Vision Statement.
2. Manage the Route 35 corridor as the Main Street of the Borough and the unifying element of the four quarters of the Borough.
    a. Provide a land use plan that recognizes that properties along Route 35 should cohesively link the Borough's various activities and its neighborhoods.
    b. Establish a zone plan that promotes a successful business area that transitions to and balances recreational uses on the Oceanfront and Bay with the use of residential properties.

c. Improve and maintain a pedestrian friendly approach along the Route 35 corridor and encourage public activity consistent with the human scale and family-friendly environment that Seaside Park encourages.

3. Direct residential development and infill to respect the existing scale and character of the Borough and maintain light, air, and open space within the community.
    a. Protect and improve quality of life within the Borough, reduce pollution, minimize new infrastructure demands, and protect the environment. Minimize the traffic impact on the neighborhoods within the borough.
    b. Provide for development and redevelopment to achieve the Borough Vision Statement.
    c. Encourage residential development and construction that is consistent with the surrounding neighborhood.
4. Maintain or increase pervious coverage to address storm water runoff issues.

Circulation

1. Provide for an improved circulation system within the Borough
    a. Maintain and upgrade the sidewalks, curbs, and handicap accessibility for increasing pedestrian activity.
    b. Encourage improvements to the Borough's road network to increase safety and to promote the free flow of traffic.
    c. Maintain and upgrade bicycle facilities and paths for increased bicycle activity.
    d. Limit commercial through traffic to Route 35 and remove it from Bay and Ocean Avenues.
    e. Consider traffic calming techniques and changing some narrow streets to only one way where appropriate.
    f. Create loading zones within the Borough to improve both vehicle and pedestrian safety.
    g. Provide for improved street and boardwalk lighting.
    h. Ensure that all traffic and parking regulations are enforced.

i. Review the opportunities of expanding paid parking spaces along South Ocean Avenue and providing seasonal residential parking permits.

Municipal Facilities and Services

1. Provide for improved community facilities and services to meet the needs of Borough residents.
    a. Provide a quality education for the resident children in a thorough and efficient manner. Consider alternatives to the present method to maximize efficiency and control educational spending.
    b. Provide effective public safety services through the Police Department, Fire Department, First Aid Squad, and Office of Emergency Services.
    c. Create effective management procedures to ensure that all municipal activities are performed in an efficient and effective manner.
    d. Provide the resources necessary to effectively support the administrative functions of the municipality.
    e. Control storm water flow in cooperation with the state and county and consider requiring a storm water management plan as part of all new construction applications.
    f. Improve the current street cleaning operations to maximize the benefits of reducing Barnegat Bay water pollution and storm drain silting as well as insuring compliance with state regulations regarding storm water runoff.
    g. Ensure the water and sewer infrastructure is monitored and maintained to minimize infiltration and prevent system failure.
    h. Ensure the preservation and satisfactory maintenance of the recreational areas (beaches, dunes, marinas, boardwalks, playgrounds, ball fields, and piers) to serve the present and future needs of the Borough.
    i. Provide for compliance with the Americans with Disabilities Act for all public areas.

j. Aggressively pursue every opportunity to obtain grant funding for both current and long term municipal projects.
k. Establish a knowledgeable working committee to oversee and direct municipal efforts to identify, develop and implement beneficial shared services agreements with neighboring communities.

Natural Resources/ Environmental Protection

1. Protect the natural resources and barrier island environment of the Borough.
    a. Preserve environmentally sensitive areas along the Bay and Ocean fronts.
    b. Continue to explore alternative solutions to minimize flooding along the Bay front.
    c. Encourage efforts to reduce stormwater runoff and flooding.
    d. Promote building design principles that minimize the creation of “wind tunnels.”
    e. Promote the use of renewable energy sources.
    f. Promote the recovery and recycling of materials from solid waste.
    g. Ensure effective programs are implemented and monitored to safeguard water quality.
    h. Enforce compliance with flood hazard regulations.
    i. Comply with Stormwater Management requirements.

Economic Development

1. Provide for the beneficial economic development of the Borough.
    a. Encourage a pedestrian friendly shopping area along Route 35.
    b. Promote improvements of building façades in the business areas.
    c. Encourage desirable visual design of new and upgraded businesses.
    d. Attract economic development appropriate to the Borough vision.

Housing

1. Provide for housing that is appropriate to the desired character of the neighborhood.
    a. Stop conversions of seasonal accessory residences to year-round residency.
    b. Maintain the quality of the housing stock by enforcing construction and property maintenance ordinances and code regulations.
    c. Revise setbacks as needed to ensure light, air, open space, and privacy within Borough neighborhoods.
    d. Ensure effective inspection of all code regulations

Parks, Recreation, and Open Space

1. Provide for and maintain a park, recreation, and open space system that meets the needs of the community.
    a. Protect and improve existing recreation facilities, parks and open space.
    b. Increase recreational opportunities for walking and biking.
    c. Preserve additional open space in appropriate locations.

Character and Design

1. Promote a desirable visual environment.
    a. Establish a design continuity for all public facilities that supports the vision statement and contributes to a unifying image of the community.
    b. Consider establishing an architectural design review committee.
    c. Limit the location of cell towers, signage and lighting to ensure that the Borough is an attractive seashore community.

Recycling

1. Continue to provide the facilities and services that have made the Borough one of the leading recycling municipalities in Ocean County.

EXTENT TO WHICH PROBLEMS HAVE BEEN REDUCED OR INCREASED

The second provision of N.J.S.A. 40:55D-89 of the MLUL states that the Re-examination Report shall include:

> ***"The extent to which such problems and objectives have been reduced or have increased subsequent to such date."***

The following is a listing of planning activities that were undertaken by the Borough and the Planning Board following the 2008 Master Plan.

Land Use and Density

The Borough zoning map was revised in September of 2009 per the 2008 Master Plan recommendations.

Structures fronting on Route 35 were rezoned to a Mixed Use District to promote economic and commercial activity. The mixed use along the Route 35 corridor allows for greater flexibility for the Borough to provide for commercial uses, professional offices, and mixed uses so that commercial enterprise can be sustained throughout the year.

The three (3) residential zones were consolidated into one (1) single-family residential zone with a multi-dwelling zone located on Ocean Avenue, near the Boardwalk. Through this residential zone consolidation, the Borough's goal was to control the overall density of development and to mitigate the problems caused by the increase in seasonal occupancy.

The 2008 Master Plan included the goal to provide for the future use of the Boardwalk area to achieve the Community Vision for a safe, clean, and quiet environment. Due to the destruction caused by Superstorm Sandy and subsequent fire this is a

continuing recommendation. The Borough should continue to evaluate appropriate uses and scale of the Boardwalk zone.

Seaside Park should also continue to maintain and increase pervious surface throughout the Borough with the use of Best Management Practices (BMPs) in order to improve water quality, reduce stormwater runoff, and beautify roadways.

Circulation

Superstorm Sandy resulted in severe damages to State Route 35 in Seaside Park. Damages included roadway breaches, sink holes, voids below the roadway foundation, and severe damage to the drainage system such as broken and collapsed pipes and outfalls. New Jersey Department of Transportation (NJDOT) announced in July of 2013 that it would work to repair these damages. Construction finished in summer of 2015.

Improvements to State Route 35 addressed many of the recommendations from the 2008 Master Plan. Full reconstruction of the roadway pavement and replacement and installation of drainage infrastructure was undertaken. New inlet grates will trap debris, and subsurface water quality manufactured treatment devices will purify storm-water prior to discharge into the Bay.

The Borough is encouraged to continue addressing parking issues in both residential and beach areas. Adequate on-street parking should be provided for Borough residents.

Municipal Facilities and Services

The recommendations set forward in the 2008 Master Plan are recommended to be continued. Additionally, the Borough should reference the SRPR regarding vulnerabilities of municipal facilities towards sea level rise and flooding when making decisions for emergency preparedness and recovery.

Natural Resources and Environmental Protection

Seaside Park reported that Sandy reduced the width of its dune system by approximately 40%. Dunes were critical to limiting damage to property in the Borough. In the immediate aftermath of Sandy, Seaside Park Department of Public Works carried out emergency reconstruction of beach entrance dunes and other compromised areas using front-end loaders. DPW also took on a major dune grass planting operation, resulting in the planting of over 300,000 American Beach Grass plants, and also replaced several miles of snow fence.

In November of 2013, Seaside Park revived its volunteer Dune Grass Planting program to replenish vegetation along its dunes. DPW continued the tradition in November 2014 and again in 2015. Because of the critical role that the Borough's dune's played during Superstorm Sandy, it is recommended that the Borough make maintenance and upkeep of this natural resource a top priority. This is a continuing recommendation from the 2008 Master Plan.

Economic Development

The 2008 Master Plan recommended that the Borough provide for the beneficial economic development of the Borough. The Borough's boardwalk sustained significant damage from the storm, and the local and regional tourism industry was adversely impacted. It is a continuing recommendation that the Borough evaluate and improve its economic development policies in order to recover from the damages of Superstorm Sandy and provide for year round economic opportunities.

Housing

Seaside Park should continue to monitor the latest Affordable Housing legislation and remain compliant with any affordable housing obligations assigned to the Borough.

Parks, Recreation, and Open Space

The Borough offers weekly recreation programs, both free and for a fee, as well as special events throughout the year. All of these events are advertised via the Borough's website. Seaside Park should continue to provide recreation opportunities for all ages and abilities.

Character and Design

The recommendations set forward in the 2008 Master Plan are a continuing recommendation. The Borough should also incorporate flood resistant design into the land use ordinance.

Recycling

The Borough should continue to implement the recycling program, and review applicable sections of the Borough Code to update recycling policies as necessary.

SIGNIFICANT CHANGES IN ASSUMPTIONS, POLICIES AND OBJECTIVES FORMING THE BASIS FOR THE MASTER PLAN OR DEVELOPMENT REGULATIONS SINCE THE 2008 MASTER PLAN

The third provision of 40:55D-89 of the MLUL requires that a Re-Examination Report address:

"The extent to which there have been significant changes in the assumptions, policies and objectives forming the basis for the master plan or development regulations as last revised, with particular regard to the density and distribution of population and land uses, housing conditions, circulation, conservation of natural resources, energy conservation, collection, disposition and recycling of designated recyclable materials, and changes in state, county and municipal policies and objectives. "

Seaside Park Elementary School Closing

The Borough of Seaside Park closed its elementary school prior to the 2011-2012 school year. In result, the Borough entered into a sending-receiving agreement with Toms River Schools. In 2015, the Borough was approved to enter into a dual sending-receiving relationship that will permit Seaside Park students in grades Kindergarten to Six to attend school in either Toms River or Lavallette.

Since the closing of Seaside Park Elementary, the school building has been utilized by the Borough for administrative and recreational purposes. The property is approximately .92 acres and fronts on Central Ave. It is bordered mostly by residential uses with commercial uses on the northeast and southeast similarly fronting on Central Avenue.

Superstorm Sandy

Superstorm Sandy had devastating effects on the Borough's homes, businesses, and infrastructure when it hit on October 29, 2012. The storm made vulnerabilities to flooding

apparent to New Jersey's coastal communities, and municipalities should plan for long term recovery and resiliency projects.

Specifically in Seaside Park, the dune system along the Borough's Atlantic Ocean beaches was effective at limiting damage to properties on the Borough's eastern side. Only eleven of the fifty four properties demolished by the storm were east of Route 35. Flooding from the Bay, however, was far more substantial. Nearly every property west of Route 35 was located within Superstorm Sandy's storm surge, and suffered major flooding.

The storm also revealed the inadequacy of the utility systems serving the Borough with regards to their abilities to endure major weather events. Residents were without gas or power for nearly two months following the storm, and the Borough's water and sewer systems were compromised. Seaside Park's drainage system was found to be susceptible to clogging by debris following storm events, as occurred during Sandy.

The effects of Superstorm Sandy did, however, also provide for opportunities for coastal municipalities to reexamine policies related to flooding and natural disasters, as well as resiliency towards future storm events. Now in reexamining Seaside Park's Master Plan, the Borough has the opportunity to:

- Promote the public's awareness of their flood risks and mitigation strategies to protect themselves and their community;
- Introduce ordinances and design standards that will better enable homes and businesses to withstand the effects of coastal storms;
- Focus public agencies on community vulnerabilities to hazards such as flooding;
- Ensuring that future capital projects are designed and constructed to incorporate features that are resilient to storm- and flood-related impacts;
- Integrate hazard mitigation into Master Plan elements; and
- Provide greater awareness of environmental protection and stewardship to provide for a more sustainable future.

Update to Affordable Housing Legislation

On December 20, 2004, COAH's third round substantive and procedural rules became effective. On January 25, 2007, the Appellate Division of the Superior Court of New Jersey delivered an opinion which sustained, and invalidated certain section of N.J.A.C. 5:94. In particular, this opinion affected all municipalities' ability to precisely determine their Cycle III affordable housing fair share, and also called into question certain compliance techniques used since December 20, 2004 to address "growth share" obligations. COAH subsequently adopted revised third round regulations resulting from the Appellate Division decision, which became effective on September 22, 2008. The third round rules employ a significantly different methodology than the first and second round rules. COAH adopted a "growth share" methodology, in which the need for affordable housing is based upon projected growth by a municipality, instead of the municipality being assigned a specific number of new construction affordable units to be provided independent of actual growth.

In 2013 the Supreme Court affirmed the Appellate Division's decision and directed COAH to adopt new rules, based on the Prior Round methodology; however, the COAH board reached an impasse at its October 2014 meeting and failed to adopt any Third Round rules.

To establish an orderly compliance review and approval process by trial courts, the Supreme Court provided a 90-day period before its decision would take effect, on June 8, 2015. The Court also established a 30-day deadline, July 8, 2015, for municipalities that had been in the COAH process to file a declaratory judgment and seek judicial review of their fair share housing plans by trial courts. On and after July 9, 2015 interested parties were able to file noncompliance action against a municipality.

Following the July 8, 2015 deadline to file a declaratory judgment, accepted municipalities were given five (5) months to demontrate their compliance with affordable housing obligations. The Supreme Court stated that Third Round housing obligations are to be determined based on the First and Second Round rules.

Demographic Characteristics

The following is a summary of the demographic, housing and economic indicators and changes in the Borough, specifically as they relate to changes in the Borough compared to prior years, as well as how this relates to the County and or the State as a whole, where applicable.

As illustrated in Table A, below, the population of the Borough of Seaside Park experienced varied patterns of growth, with the largest being between 1920 and 1930.

Table A Seaside Park Borough Population Characteristics 1900 – 2010			
Year	**Population**	**% Change**	**Population Density** (People per square mile)
1900	73	--	95
1910	101	38.4%	132
1920	179	77.2%	233
1930	571	219.0%	743
1940	653	14.4%	850
1950	987	51.1%	1,285
1960	1,054	6.8%	1,372
1970	1,432	35.9%	1,865
1980	1,795	25.3%	2,337
1990	1,871	4.2%	2,436
2000	2,263	21.0%	2,947
2010	1,579	-30.2%	2,056
Source: Historical Census Data, 2010 Decennial Census			

Population density is a measure of the number of people residing within a given land area. New Jersey has the highest population density in the nation, with an average of 1,134 persons per square mile. According to 2010 US Census data, the Borough of Seaside Park had a density of 2,056 persons per square mile. The Borough saw a steady increase in population until 2010 which marked a 30.2% decrease.

As illustrated in Table B, below, the age cohort breakdown of the Borough of Seaside Park has an older population than Ocean County with the median age being almost ten (10)

years older. A breakdown of population by age for the Borough and County is provided below:

Table B: Seaside Park Borough : Population Comparison by Age		
Age	**Seaside Park Borough**	**Ocean County**
Under 5	2.8%	6.7%
5 to 19	11.2%	18.8%
20 to 24	5.3%	5.3%
25 to 44	19.5%	22.2%
45 to 64	34.4%	25.9%
Over 65	26.8%	21%
Median Age	52.1	42.6
Source: Table DP-1, 2010 Census Data		

According to the 2010 United States Census, the Borough of Seaside Park's largest age cohort is between ages 45 to 64 years of age. The second largest age grouping is seen in the over 65 age range. The Census data also indicates that the median age of Borough of Seaside Park is 52.1 years of age, far greater than the Ocean County median age of 42.6 years of age.

According to the American Community Survey (ACS), the Borough of Seaside Park has a higher income base when compared to the Ocean County average. The distribution of households by income for the Borough of Seaside Park and Ocean County is presented within Table C titled Households by income (%), below.

Table C Seaside Park Borough: Households by Income		
Income in ($)	**Seaside Park Borough**	**Ocean County**
Less than $10,000	6.3%	4.3%
$10,000 - $14,999	1.9%	4.1%
$15,000 - $24,999	10.2%	10.4%
$25,000 - $34,999	7.1%	9.4%
$35,000 - $49,999	13.3%	12.6%
$50,000 - $74,999	16.9%	17.8%
$75,000 - $99,999	16.5%	13.2%
$100,000- $149,000	15.5%	16.3%
$150,000 - $199,999	6.3%	7.0%
$200,000 or more	6.0%	4.7%
Median Household Income	$70,256.00	$61,839.00
Per Capita Income	$51,381.00	$30,951.00
Source: Table DP03, 2010-2014 5-Year Estimates, American Community Survey		

The 2014 ACS five-year estimate data indicates that the median household income in the Borough of Seaside Park was $70,256.00. This was higher than the Ocean County median of $61,839.00, and only marginally lower than the state average, which was $72,062.00. In addition, the Census data also states that the per capita income for the Borough of Seaside Park residents was $51,381.00, which is higher than the County per capita income of $30,951.

Employment Characteristics

The ACS also reports work activity for the Borough's residents who are sixteen (16) years of age or older. There were 1,287 people 16 years of age or older as reported in the ACS data. From this cohort, 609 people, or 47.3% of the Borough residents were employed based on the 2014 ACS estimates. As indicated in Table D below, only 5.9% of workers are self employed and that the majority of workers are employed in the private sector.

Table D Seaside Park Borough Classification of Workers		
Class	**Seaside Park Borough**	**Percentage of Workers**
Private Wage and Salary	460	75.5%
Government Workers	113	18.6%
Self Employed	36	5.9%
Unpaid Family	0	0.0%
Total	**609**	**100.00%**
Source: Table DP03, 2010-2014 5-Year Estimates, American Community Survey		

The Borough of Seaside Park maintains a relatively diverse workforce ranging in occupation from manufacturing, finance, education and professional services to retail, wholesale and public administration. These sectors make up the bulk of the workforce in the Borough of Seaside Park.

As depicted in Table E below, 29.2% of the total workforce worked in the educational, health and social services sector while 11.7% of the workforce was in the retail sector. The next concentration of workers, at 11.5% of the total workforce was in construction followed by other services, except public administration at 11.2% of the workforce.

Table E Seaside Park Borough Workforce by Sector

Sector	Employees	Percentage of Workers*
Agriculture, Forestry, Fisheries and Mining	0	0.0%
Construction	70	11.5%
Manufacturing	7	1.1%
Wholesale Trade	9	1.5%
Retail Trade	71	11.7%
Transportation, Warehousing and Utilities	20	3.3%
Information	16	2.6%
Finance, Insurance and Real Estate	44	7.2%
Professional, Scientific, Management, Administrative and Waste Management Services	48	7.9%
Educational, Health and Social Services	178	29.2%
Arts, Entertainment, Recreation, Accommodation and Food Services	45	7.4%
Other Services	68	11.2%
Public Administration	33	5.4%
Total	609	100%

Source: Table DP03, 2010-2014 5-Year Estimates, American Community Survey
*Numbers are rounded to nearest tenth.

Housing Characteristics

According to the 2014 ACS, the Borough of Seaside Park contains a relatively old housing stock. The largest periods of home construction occurred in the earlier half of the 20th century. 59.9% of the housing stock was built before 1960. See Table G below.

Table G Seaside Park Borough's: Housing Stock		
Year Structure Built	**Total**	**Percentage**
2010 or later	9	0.3%
2000 to 2009	197	7.2%
1990 to 1999	144	5.3%
1980 to 1989	266	9.7%
1970 to 1979	250	9.1%
1960 to 1969	243	8.9%
1950 to 1959	483	17.7%
1940 to 1949	312	11.4%
1939 or earlier	829	30.3%
Source: Table DP04, 2010-2014 5-Year Estimates, American Community Survey		

Analysis of Housing Units

Based upon the 2014 ACS, the Borough of Seaside Park contained approximately 2,733 housing units. The largest grouping of housing units in the Borough are classified as single-unit, detached, which comprised 56.1% of total housing units, while 2-units made up 14.3% of the housing stock. 1-unit, attached made up 7.3% of total stock and housing structures with 10 to 19 units made up 7.0% of the housing stock. Refer to Table H below for the review the total dispersion of housing units.

Table H Seaside Park Borough: Housing Units		
Unit Type	**Units**	**Percent of Total**
Total housing units	**2,733**	--
1-unit, detached	1,533	56.1%
1-unit, attached	200	7.3%
2-units	390	14.3%
3 to 4 units	189	6.9%
5 to 9 units	145	5.3%
10 to 19 units	192	7.0%
20 or more units	84	3.1%
Mobile home	0	0.0%
Boat, RV, van, etc.	0	0.0%
Source: Table DP04, 2010-2014 5-Year Estimates, American Community Survey		

Cost of Housing Stock

According to the 2014 ACS, the median value of housing sales in the Borough of Seaside Park was $669,300. The majority of the housing stock in the Borough was valued in excess of $300,000 or higher, and well over 50% of the housing stock is valued over $500,000, as shown below within Table I, Value of Sales Housing.

Table I Seaside Park Borough: Value of Sales Housing		
Home Value Range	**Total Units in Range**	**Percent of Total**
Owner-occupied units	**556**	--
Less than $50,000	0	0.0%
$50,000 to $99,999	11	2.2%
$100,000 to $149,999	0	0.0%
$150,000 to $199,999	0	0.0%
$200,000 to $299,999	11	2.0%
$300,000 to $499,999	107	19.2%
$500,000 to $999,999	299	53.8%

Table I Seaside Park Borough: Value of Sales Housing		
Home Value Range	**Total Units in Range**	**Percent of Total**
$1,000,000 or more	128	23.0%
Median (dollars)	$669,300	--
Source: Table DP04, 2010-2014 5-Year Estimates, American Community Survey		

For rental units, the median gross rent in the Borough of Seaside Park was estimated at $1,210.00 in 2013, according to the 2009-2013 American Community Survey. The median gross rent in 2013 for Ocean County was $871. Therefore, the rent in the County as a whole is moderately lower than the rent for the Borough of Seaside Park.

SPECIFIC CHANGES RECOMMENDED FOR THE MASTER PLAN AND/OR DEVELOPMENT REGULATIONS

Comprehensive Goals

a. Maintain consistency with the purposes of the Municipal Land Use Law (MLUL) as contained within N.J.A.C.4 0:55D-2;

b. To continue to be a stable and diverse community through the provision of a balanced land use pattern;

c. Encourage the development of both active and passive recreation opportunities for the residents and visitors, while maintaining sensitivity to environmental and cultural resources;

d. To maintain and enhance a local economy that encourages the provision of more cost effective public services in order to improve the quality of life for Seaside Park Borough residents;

e. To encourage the establishment of policies, codes and standards that promotes the use of sustainable development practices, including but not necessarily limited to: infrastructure, public and private buildings, open space and recreation, local waste and recycling among other things;

f. To continually improve the sustainability profile of the Borough;

g. To continue to promote the health, safety and general welfare and to minimize public and private losses due to flood conditions and specific areas by provisions designed to: protect human life and health; minimize of expenditure of public money for costly flood control project; minimize the need to rescue and relief efforts associated with flooding and generally undertaken at the expense of the general public; minimize prolonged business interruption; and minimize damage to public facilities and utilities such as water and gas mains, electric, telephone and sewer lines, streets, bridges located in areas of special flood hazard.

Comprehensive Objectives

a. To encourage the redevelopment or revitalization of vacant or underutilized properties;

b. Preserve the high level of public services and provide new facilities where necessary, in order to accommodate population growth, economic development and the changing needs of the residents;

c. Wherever possible, promote energy efficiency, conservation and increased use of renewable energy to reduce waste and increase recycling; to reduce the use of hazardous materials and eliminate toxic substances; and to reduce greenhouse gas emissions, for the new construction and/or retrofitting of public and private structures;

d. To plan for mitigating the effects of climate change;

e. Encourage the utilization of innovative and creative approaches in order to facilitate the provision of housing for low, moderate, and work force housing opportunities and choices, which will enhance the quality within and contribute to the value of the community; and

f. To collaborate with other government, non-government and private entities to create the most efficient and effective means for realizing Seaside Park's Master Plan goals, while minimizing the financial burden on the Borough.

Specific Goals

a. Encourage and support the rehabilitation and infill of the housing stock where appropriate while maintaining the character, scale and privacy of the established residential neighborhoods in the Borough;

b. Recognize the need to adapt to the changing dynamics and demands of a diverse and increasingly globalized economy;

c. To coordinate land uses with transportation facilities to improve access and encourage alternatives to driving;

d. Encourage those public and private actions necessary to develop and sustain the long-term vitality of the key commercial/retail areas. This can be achieved by improving streetscapes through unified signage, facades, public walkways and landscaping, and improving vehicular and pedestrian circulation and a unified wayfinding program. This will help guide residents and visitors to the plethora of environmental and recreational opportunities in the Borough;

e. Evaluate the potential for economic and rehabilitation plans in strategic locations within the Borough, where appropriate, to encourage sound land use development that can provide economic development opportunities, while at the same time balancing the preservation of neighborhood character as well and the protection of environmental resources.

f. Evaluate the current open space that is owned by the Borough to determine if uses can be improved.

g. Ensure that the Borough's code is up to the latest flood hazard prevention standards.

Recommendations

a. Review and revise the Boardwalk Zone to determine the most effective use of this District.

   (1) Consider adopting a Form Based Zoning Code to maintain consistency between the permitted uses and aesthetics of the Boardwalk Zone, and the goals of the Master Plan Re-examination.

b. Continue to review the Borough's Flood Hazard standards and revise according to latest FEMA recommendations.

c. Retrofit existing municipal facilities to reduce vulnerabilities to future storm and flooding events.

d. Reference and implement the recommendations set forward in the Strategic Recovery Planning Report to reduce vulnerabilities to future natural

disasters. Recommendations to be considered include, but shall not be limited to:

(1) Strengthen the Borough's Participation in FEMA's Community Rating System.

(2) Amend planning documents to adequately address the impacts of Superstorm Sandy on the community and to set goals and recommendations for resilient development.

(3) Improve drainage system maintenance to ensure that all storm drains are free and clear of debris before major storm events.

(4) Continue to review and reevaluate methods to reduce vulnerabilities to future natural disasters.

(5) Consider anchoring standards for various accessory structures to reduce vulnerabilities.

e. Utilize Best Management Practices (BMP) when planning for stormwater reduction and flood prevention.

(1) Improve stormwater management by implementing policies and practices as outlined by the New Jersey Department of Environmental Protection (NJDEP) and the Environmental Protection Agency (EPA).

- "NJ Stormwater Best Management Practices Manual" –NJDEP
- "Green Infrastructure in NJ" –NJDEP
- "Green Streets: Sustainable Stormwater Management" –EPA
- "Stormwater to Street Trees: Engineering Urban Forests for Stormwater Management"- EPA

(2) Consider improving local roads to include BMP techniques such as, but not limited to: green streets; stormwater planters; street tree

trenches; corner bump-outs; sand filters; pervious pavements; manufactured treatment devices; and vegetated filter strips.

f. Continue to periodically review and upgrade emergency power backup systems and solutions for the Borough's emergency responders.

g. Continuously review and update the Borough's general and emergency debris management plans.

h. Review and revise bulk standards for Schools and Churches permitted in the Mixed Use Zone and Business Zone. Recommended changes are provided in Appendix B.

i. Determine appropriate reuse of the Seaside Park Elementary School property.

   (1) Consider repurposing the property and rezoning the portion along Central Avenue to Commercial and the remainder to Residential.

   (2) Any future use should be consistent with the size and character of adjacent lots and uses.

j. Develop and adopt a fertilizer ordinance (example included in Appendix C) to reduce the amount of fertilizer-related pollutants discharged into the Barnegat Bay.

k. Review applicable recycling-related sections of the Borough Code and update as necessary.

l. Review the Borough's Stormwater Control Ordinance for consistency with current technical guidance, and update as necessary.

RECOMMENDATIONS OF THE PLANNING BOARD CONCERNING THE INCORPORATION OF REDEVELOPMENT PLANS INTO THE LAND USE ELEMENT AND LOCAL DEVELOPMENT REGULATIONS

Currently, there are no Redevelopment Areas in the Borough, but it should be recognized that this is still a viable tool to stimulate private investment, economic development and reconstitute otherwise stagnant buildings, structures, properties and or areas of the Borough. As such, it is recommended that the Borough consider utilization of this tool in the future, in appropriate areas of the Borough.

Appendix A: Proposed Boardwalk Form Based Code

A form based code is a style of land development regulation that aims to achieve a specific physical outcome. It differs from conventional zoning in that it emphasizes differences in physical form over differences in land use. Traditional zoning generally assigns areas of a community into districts based on the most appropriate type of use (detached single family, multi-family, industrial), and assigns bulk and design requirements as an after-thought. Form Based Code does consider appropriate land uses, but is primarily concerned with assigning properties to districts according to the most appropriate physical forms for the district (multi-story mixed use with zero-line setbacks, single family detached with setbacks). In the case of the Boardwalk Zone, the goal would be to replace the conventional zoning governing Block 97, Lots 19, 20, and 20.01, that is concerned primarily with land use and provides general requirements for physical form governing the lots as wholes, with a regulatory document that aims to result in physical form that varies across the Boardwalk.

Another significant difference between form based codes and conventional zoning codes is that form based codes typically include graphics depicting desirable building types. Form based codes also often specify which uses are appropriate for each building type. A form based code does not intend to dictate architectural styles, though it does aim to guide urban design to fit a general vision.

In addition to building design, form based codes are often concerned with the size, function, and design of roads. For example, roads are classified as being suitable for rural roads fronted by residences and farms, and therefore would be somewhat narrow and be without parking on the shoulders; or roads are classified as passing through a downtown area and therefore should have sufficient parking, narrow lanes to limit driver speeds, and bike lanes to permit multi-modal transport. As there are no roads passing through the Boardwalk, this facet of form based zoning does not apply to the proposed Boardwalk code. However, the Borough may feel that it is appropriate for the Form Based Code to define different categories of pedestrian pathways and to illustrate the most appropriate areas for each category pathway to be located.

Section 200-71 Boardwalk Form Based Code

A. Purpose: The purpose of the Boardwalk Form Based Code is to guide future development along Seaside Park Borough's Boardwalk, so that it occurs at an appropriate scale, and takes into consideration how development projects will impact the aesthetics and function of the public realm. The Boardwalk is host to high-density commercial and development, and is a seasonally active area of mixed commercial uses including games, amusements, rides and retail services. This Code divides the Boardwalk area into four sections, each having its own restrictions and permissions with regards to permitted use, bulk, and aesthetic. The four zones are as follows. See attached map for further reference.

1. **Ocean Avenue Row** which is bounded by the southernmost to the northernmost property lines of Block 97, Lot 20 (and includes Block 97, Lot 19); the property line fronting Ocean Avenue; and an imaginary line extending 105.78 feet east of the southwestern-most corner of Lot 20, approx. 133.5 feet north, approx. 50 feet west, and approximately 350 feet north to the northern-most property line of Lot 20.
2. **Promenade Row** which is bounded by the easternmost line of Ocean Avenue Row, and extends 120 feet east from the western-most property line and is bounded on the north and south side by Lot 20's north and South property lines.
3. **Amusement Zone** which is bounded on the north side by the northern property line and south side by an imaginary line extending from the centerline of Farragut Avenue, and extends east to west from the eastern-most boundary of Promenade Row to Lot 20's western property line.
4. **Water Dependent Use Zone** which is bounded on the north side by an imaginary line extending from the centerline of Farragut Avenue and south side by the property line, and extends east to west from the eastern-most boundary of Promenade Row to Lot 20's western property line.

Form Based Code Boardwalk Divisions

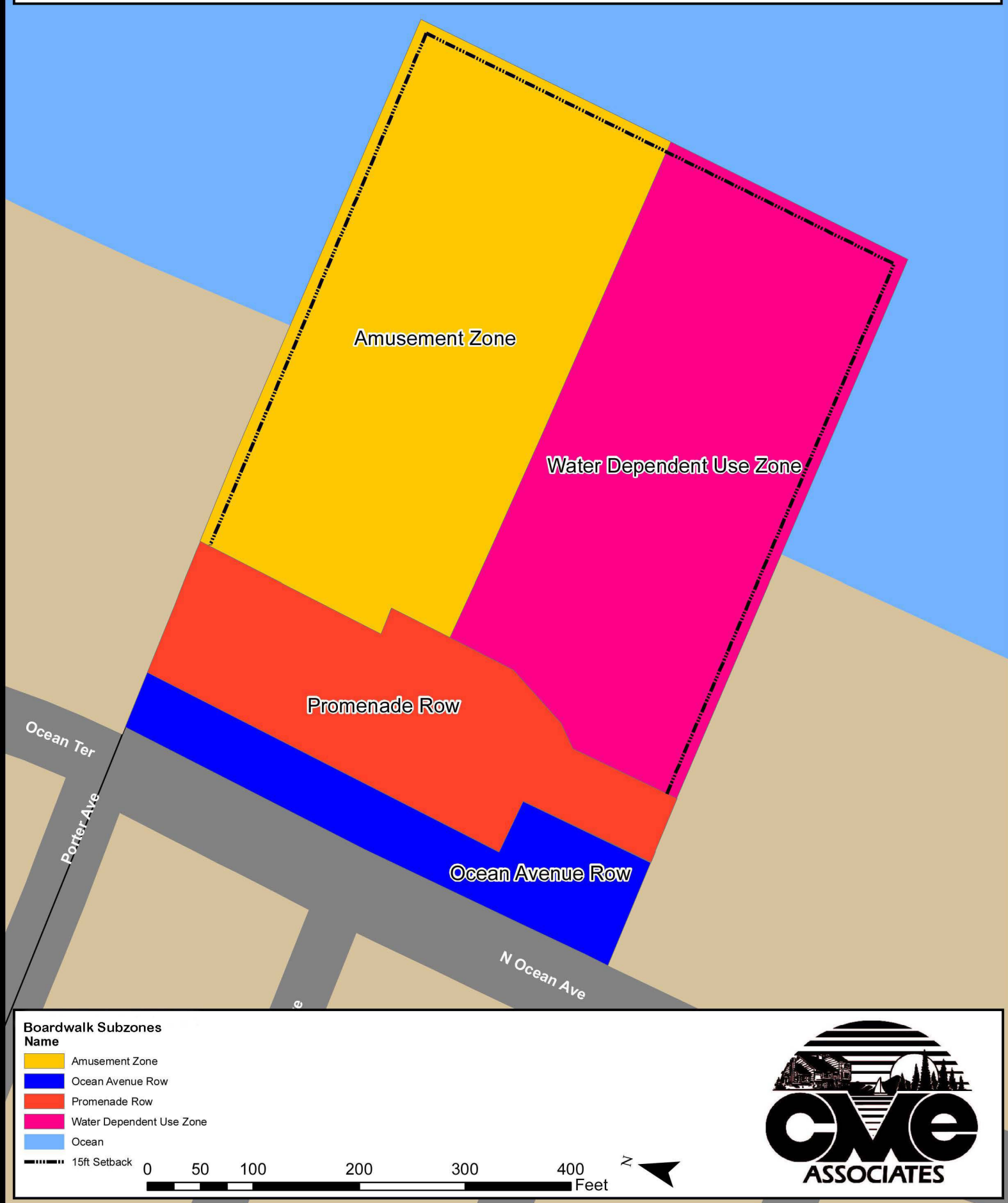

B. Applicability.

1. Provisions of this code are activated by “shall” when required; “should” when recommended; and “may” when optional.
2. The provisions of this Code, when in conflict, shall take precedence over those of other codes, ordinances, requirements and standards except the local health and safety code.
3. The Boardwalk Form Based Code Zoning shall apply to the Block 97, Lots 19, 20, and 20.01.
4. The requirements of this chapter shall not be construed to eliminate the need for an applicant or property owner to comply with other applicable sections of the Seaside Park Borough Code, or to obtain approvals from other agencies with jurisdiction, such as the county or the State of New Jersey.
5. Where in conflict, numerical metrics shall take precedence over graphic metrics.

C. Intent. The intent and purpose of this Code is to enable, encourage and qualify the implementation of the following policies:

1. To provide for Boardwalk development that is financially and economically viable while respecting the character of the surrounding neighborhoods;

2. To maintain an attractive space that is safe and easily navigable; and

3. To promote design that is resilient and minimizes risk to life and property resulting from coastal storms.

D. Map and Permitted Uses

1. The map included below illustrates the divisions of each section of the Boardwalk identified above.

2. Permitted uses for each section of the Boardwalk are listed in the table below:

Use	OA	P	AZ	WDZ
Public Restrooms	P	P	P	P
Retail Sales	P	P	P	P
Concession Stands	C	P	P	P
Snack Bars	C	P	P	P
Restaurants	P	P	P	P
Banquet Facilities	P	NP	P	P
Outdoor Dining	P	P	P	P
Beach Clubs	NP	P	P	P
Water Recreation Rentals	NP	NP	P	P
Fishing Clubs	NP	NP	P	P
Miniature Golf Course	P	P	P	P
Amusement Arcades	P	P	P	P
Games/Stands	C	P	P	P
Amusement Rides	NP	NP	P	P
Public	P	P	P	P

3. Prohibited Uses: Any uses not permitted in D2 above

E. Standards and Requirements for Boardwalk Sections

1. Ocean Avenue Row

I. Purpose: Ocean Avenue Row is intended to permit development consistent in design and use with existing buildings fronting Ocean Avenue.

II. Permitted Building Types:

(1) Linear Building

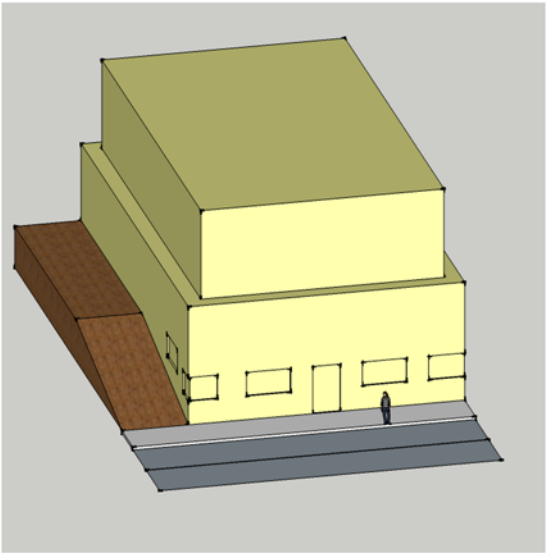

Buildings in the Ocean Avenue Row shall not exceed two (2) stories in height, and shall not be set back from the Ocean Avenue Right of Way. There shall be no less than 15 feet of distance separating buildings where ramps provide access to the Boardwalk.

III. Permitted Uses.

a. Public restrooms
b. Retail stores
c. Restaurants
d. Banquet facilities
e. Outdoor dining
f. Miniature Golf Course

g. Video Arcades

h. Public

IV. Conditional Uses: The following uses are permitted in the Ocean Avenue Row district conditioned they do not front on Ocean Avenue

a. Concession stands

b. Snack bars

c. Games

V. Prohibited Uses: All uses not explicitly permitted in this section are prohibited in the Ocean Avenue Row.

VI. Area, Yard, and Bulk Requirements:

Minimum Front Setback	0 feet
Minimum Side Setbacks	5 feet
Minimum Rear Setback	0 feet
Maximum Building Height	35 feet / 2 stories, measured from the boardwalk
Structure to Structure	15 feet

2. Promenade Row:

I. Purpose: Promenade Row is intended to provide a promenade area consisting of low intensity game, retail, and amusement kiosks, as well as seating, such as to minimize obstructions to pedestrian movement.

II. Permitted Building Types:

(1) Kiosks

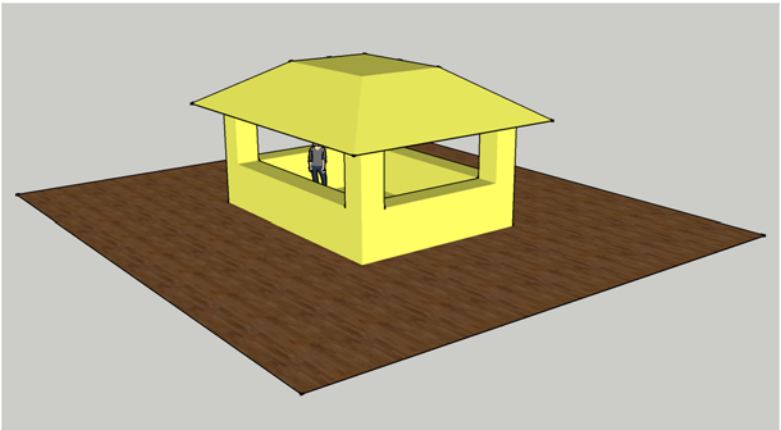

Within the Promenade Row, building types are restricted to kiosks oriented parallel to Ocean Avenue such that their centers are aligned. Kiosks should typically be open on 2 or more sides, except where access is restricted to the public for purposes including but not limited to deliveries and waste disposal, and may have exterior seating such that seating does not obstruct pedestrian movement on the Boardwalk.

(2) Linear Building

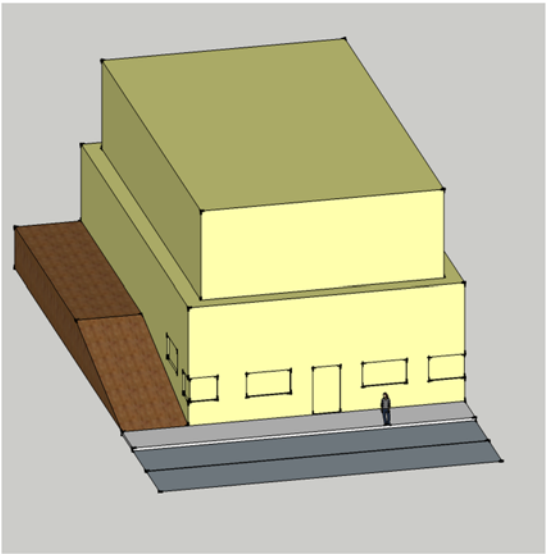

Linear Buildings in Promenade Row shall not exceed two (2) stories in height. There shall be no less than 15 feet of distance separating buildings where ramps provide access to the Boardwalk.

III. Permitted Uses

a. Public restrooms
b. Retail sales
c. Concession stands
d. Restaurants

e. Outdoor dining
f. Beach Clubs
g. Amusement Arcades
h. Games/Stands
i. Miniature golf course
j. Snack bars and related food vendors
k. Public

IV. Prohibited Uses: All uses not explicitly permitted in this section are prohibited in the Promenade Row.

V. Area, Yard, and Bulk Requirements:

Minimum Front, and Rear Setbacks	0 feet
Minimum Side Setback	5 feet
Maximum Building Height	35 feet / 2 Stories
Structure to Structure	15 feet

3. Amusement Zone:
   (1) Purpose: The Amusement Zone permits several commercial activities permitted in the Ocean Avenue Row and Promenade Row as well as amusement rides and water dependant uses.
   (2) Permitted Building Types: Within the Amusement, buildings shall be limited to kiosks, linear buildings, and mobile buildings. Also permitted within are certain rides meeting the bulk requirements indicated in E3(b)
      a. Buildings shall be situation on site is such a way that the views of the ocean are not heavily impeded.
      b. Structures shall be spaced no closer than 15 feet apart.
   (3) Permitted Uses:
      a. Amusement arcades, games, stands and rides
      b. Miniature golf courses
      c. Snack bars

d. Restaurants

e. Banquet facilities

f. Outdoor dining

g. Beach clubs

h. Non-motorized water recreation rentals

i. Fishing clubs

j. Retail stores

k. Public

l. Public restrooms

(4) Prohibited Uses: All uses not explicitly permitted in this section are prohibited in the Amusement Zone

(5) Area, Yard, and Bulk Requirements

a. Buildings

Minimum Side Setback	15 feet
Minimum Front Setback (with Front being side closest to Promenade Row)	0 feet
Minimum Rear Setback (with Rear being the side closest to the ocean)	15 feet
Maximum Building Height	35 feet / 2 Stories
Structure to Structure	15 feet

b. Rides

Minimum Side Setback	15 feet
Minimum Front Setback (with Front being side closest to Promenade Row)	0 feet
Minimum Rear Setback (with Rear being the side closest to the ocean)	15 feet
Maximum Ride Height	100 feet
Structure to Structure	15 feet

4. Water Dependent Use Zone:

1) Purpose: The Water Dependent Use Zone permits several commercial activities permitted in the Ocean Avenue Row, Promenade Row, and Boardwalk Row areas, as well as rides not exceeding 50 feet in height

2) Permitted Building Types: Buildings shall be limited to kiosks and up to 2-story enclosed structures.
    a. Buildings shall be situation on site is such a way that the views of the ocean are not heavily impeded.
    b. Structures shall be spaced no closer than 15 feet apart.
3) Permitted Uses:
    a. Amusement arcades, games, stands, and rides
    b. Miniature golf courses
    c. Restaurants
    d. Snack bars
    e. Retail stores
    f. Public
    g. Public restrooms
    h. Banquet facilities
    i. Outdoor dining
    j. Beach clubs
    k. Water recreation rentals
    l. Fishing clubs
4) Prohibited Uses: All uses not explicitly permitted in this section are prohibited in the Water Dependent Use Zone.
5) Area and Bulk Requirements
    a. Buildings

Maximum Lot Coverage – Building and boardwalk	100%
Minimum Side Setback	15 feet
Minimum Front Setback (with Front being side closest to Promenade Row)	0 feet
Minimum Rear Setback (with Rear being the side closest to the ocean)	15 feet
Maximum Building Height	35 feet / 2 Stories
Structure to Structure	15 feet

b. Rides

Minimum Side Setback	15 feet
Minimum Front Setback (with Front being side closest to Promenade Row)	0 feet
Minimum Rear Setback (with Rear being the side closest to the ocean)	15 feet
Maximum Ride Height	50 feet
Structure to Structure	15 feet

F. General Notes

1. All waste shall be managed and stored on property.

G. General Design Standards for all areas within the Boardwalk Zone

1. Scale and Style
   (1) Buildings should generally relate in scale and design features to surrounding buildings, especially buildings within the same section of the Boardwalk.
   (2) The massing of the structures shall be situated in a way as to not impede views of the ocean from the Boardwalk
2. Kiosks
   (1) Kiosks should be open on at least 2 sides;
3. Buildings Fronting Ocean Avenue
   (1) Buildings should be consistent in design with existing buildings that front Ocean Avenue.
   (2) Buildings should avoid long, monotonous or interrupted walls or roof planes. Windows should cover 30 percent of building walls facing Ocean Avenue.
   (3) Lighting equipment on building exteriors should fit the architectural styles of the buildings to which they are attached.

H. Signage

1. Signage in the Boardwalk area shall be governed by Seaside Park Ordinance §200-54E(7).

I. Sidewalks

1. Installation and minimum standards for sidewalk along Ocean Avenue and any additional sidewalk installed as part of Boardwalk construction shall comply with §200-52. Installation and minimum standards.
2. Sidewalk and related construction along Ocean Avenue within the Boardwalk Zone shall also comply with the following:
    (1) Sidewalk areas must be provided along all streets and shall be properly sized for the safe and convenient movement of pedestrians through and around the area, taking into consideration such factors as: the volume of traffic on the street, the width of the roadway, and the adjoining land uses.
    (2) Sidewalk areas must be attractively landscaped and durably paved in conformance with any minimum landscape standards and shall be provided with adequate lighting according to lighting standards. Decorative paving materials and pedestrian-scale lighting is required.
    (3) Traffic signage shall be consolidated and affixed onto lampposts to the maximum extent practical so as to reduce the number of poles, obstructions and visual clutter in the streetscape and pedestrian movement. All traffic signage must be in accordance with current MUTCD (Manual on Uniform Traffic Control Devices) guidelines.
    (4) All signal and light posts must be a consistent dark color.
    (5) All sidewalks and intersections must be ADA and PROWAG compliant.
    (6) Crosswalks are required at each intersection.
    (7) Crosswalks must be a different texture, pattern and surface from roadways and sidewalks.
    (8) Sidewalks shall not be asphalt and shall adhere to the Borough's minimum standards for sidewalks.

(9) The buffer area between the curb and sidewalk should be of a different paving material and texture than sidewalks, preferably a textured material such as pavers, brick, and/or synthetic brick.

Appendix B: Recommended Revisions for Mixed Use and Business Zones

Proposed deletions to the Business Zone and Mixed Use Zone are marked with a strikethrough, insertions are styled italics and underlined. All other portions of these ordinance sections shall remain unchanged.

§ 200-3 Definitions.

Place(s) of Worship: A building or group of buildings, including customary accessory buildings designed or intended for public worhship. For the purpose of this chapter "place of worship" shall include churches, chapels, congregations, cathedrals, synagogues, temples, as well as parish houses, convents and such accessory uses.

§ 200-68 Business Zone.

A. Purpose. The purpose of this zone is to encourage the development of both commercial and residential properties by providing for a more expansive use of the area through less restrictive regulations while controlling density, off-street parking, and minimizing stormwater runoff.

B. Principal uses of land and buildings:
    1. Detached single-family dwellings.
    2. Two-family dwellings.
    3. Multiple dwelling units (three or more units).
    4. Affordable housing (COAH), provided it fronts Central Avenue and is in accordance with all area, yard, and bulk requirements of building uses within the Business Zone.
    5. Offices, retail stores, and restaurants.
    6. Mixed use within one structure, provided in includes a combination of the following uses: residential, offices, retail stores, or restaurants.
    1. ~~**Churches**~~ ***Places of Worship***, provided they front Central Avenue***,*** ~~**and**~~ contain no residences and no other nonresidential uses ~~**other than a school**~~, ***and provide parking as follows:***
        a. ***One (1) parking space for each three (3) seats; or***
        b. ***One (1) parking space for each 72 inches of seating space when benches rather than seats are used; or***
        c. ***Where no pews or seats are provided in a house of worship, the parking requirement shall be one parking space for every 24 square feet of floor area.***
    7. Schools, provided they front Central Avenue***,*** ~~**and**~~ contain no residences and no other residential uses, ***and provide off-street parking at 1 space per faculty member or employee, plus one (1) space per 25 students.***
    8. Public.

Dimensions	~~Church~~ ***Place of Worship***	School
Minimum lot size (sf)	~~10,000~~ ***25,000***	~~20,000~~ ***25,000***
Minimum width (feet)	100	100
Minimum depth (feet)	100	100
Minimum front yard (feet)	20	20
Minimum side yard (feet)	10/side	10/side
Minimum rear yard (feet)	20	20
Maximum building coverage (%)	35	25
Maximum lot coverage (%)	75	75
Maximum stories	1	1
Maximum building height (feet)	35	25

G. Buffer requirements. ***Places of Worship and Schools shall provide a 10 foot planted buffer between residential uses. All other uses,*** see Section 200-34, Buffers.

§ 200-69 Mixed Use Zone.

A. Purpose. The purpose of this zone is to encourage the development of both commercial and residential properties by providing for a more expansive use of the area through less restrictive regulations while controlling density, off-street parking, and minimizing stormwater runoff.

B. Principal uses of land and buildings:
   2. Detached single-family dwellings.
   3. Two-family dwellings.
   4. Multiple dwelling units (three or more units).
   5. Affordable housing (COAH), provided it fronts Central Avenue and is in accordance with all area, yard, and bulk requirements of building uses within the Business Zone.
   6. Offices, retail stores, and restaurants.
   7. Mixed use within one structure, provided in includes a combination of the following uses: residential, offices, retail stores, or restaurants.
   8. ~~Churches~~ ***Places of Worship***, provided they front Central Avenue***,*** ~~and~~ contain no residences and no other nonresidential uses ~~other than a school~~, ***and provide parking as follows:***
      a. ***One (1) parking space for each three (3) seats; or***
      b. ***One (1) parking space for each 72 inches of seating space when benches rather than seats are used; or***
      c. ***Where no pews or seats are provided in a house of worship, the parking requirement shall be one parking space for every 24 square feet of floor area.***

9. Schools, provided they front Central Avenue***,*** ~~and~~ contain no residences and no other residential uses, ***and provide off-street parking at 1 space per faculty member or employee, plus 1 space per 25 students.***
10. Public.

Dimensions	~~**Church**~~ ***Place of Worship***	**School**
Minimum lot size (sf)	~~**10,000**~~ ***25,000***	~~20,000~~ ***25,000***
Minimum width (feet)	100	100
Minimum depth (feet)	100	100
Minimum front yard (feet)	20	20
Minimum side yard (feet)	10/side	10/side
Minimum rear yard (feet)	20	20
Maximum building coverage (%)	35	25
Maximum lot coverage (%)	75	75
Maximum stories	1	1
Maximum building height (feet)	35	25

G. Buffer requirements. ***Places of Worship and Schools shall provide a 10 foot planted buffer between residential uses. All other uses,*** see Section 200-34, Buffers. The following additional requirements shall apply to conditional uses:

1. In the case of any conditional use under §200-69, there shall be a designated buffer area which shall be contiguous with residential property lines and be of uniform width of not less than 10 feet. The applicant shall be required to reect a six-foot high solid fence and install landscape planting sufficient ot provide the required buffer.

Appendix C: Example Fertilizer Ordinance

Fertilizer Application Model Ordinance

SECTION I. Purpose:

An ordinance to regulate the outdoor application of fertilizer so as to reduce the overall amount of excess nutrients entering waterways, thereby helping to protect and improve surface water quality. This ordinance does not apply to fertilizer application on commercial farms.

SECTION II. Basis and Background:

Elevated levels of nutrients, particularly phosphorus, in surface waterbodies can result in excessive and accelerated growth of algae and aquatic plants (eutrophication). Excessive plant growth can result in diurnal variations and extremes in dissolved oxygen and pH, which, in turn, can be detrimental to aquatic life. As algae and plant materials die off, the decay process creates a further demand on dissolved oxygen levels. The presence of excessive plant matter can also restrict use of the affected water for recreation and water supply.

While healthy vegetated areas are protective of water quality by stabilizing soil and filtering precipitation, when fertilizers are applied to the land surface improperly or in excess of the needs of target vegetation, nutrients can be transported by means of stormwater to nearby waterways, contributing to the problematic growth of excessive aquatic vegetation. Most soils in New Jersey contain sufficient amounts of phosphorus to support adequate root growth for established turf. Over time, it is necessary to replenish available phosphorus, but generally not at the levels commonly applied. Other target vegetation, such as vegetable gardens and agricultural/horticultural plantings, will have a greater need for phosphorus application, as will the repair or establishment of new lawns or cover vegetation. A soils test and fertilizer application recommendation geared to the soil and planting type is the best means to determine the amount of nutrients to apply. Timing and placement of fertilizer application is also critical to avoid transport of nutrients to waterways through stormwater runoff. Fertilizer applied immediately prior to a runoff-producing rainfall, outside the growing season or to impervious surfaces is most likely to be carried away by means of runoff without accomplishing the desired objective of supporting target vegetation growth. Therefore, the management of the type, amount and techniques for fertilizer application is necessary as one tool to protect water resources.

This ordinance does not apply to application of fertilizer on commercial farms, but improper application of fertilizer on farms would be problematic as well. Stewardship on the part of commercial farmers is needed to address this potential source of excess nutrient load to waterbodies. Commercial farmers are expected to implement best management practices in accordance with

conservation management plans or resource conservation plans developed for the farm by the Natural Resource Conservation Service and approved by the Soil Conservation District Board.

SECTION III. Definitions:

For the purpose of this ordinance, the following terms, phrases, words, and their derivations shall have the meanings stated herein unless their use in the text of this Ordinance clearly demonstrates a different meaning. When not inconsistent with the context, words used in the present tense include the future, words used in the plural number include the singular number, and words used in the singular number include the plural number. The word "shall" is always mandatory and not merely directory.

a. Buffer - the land area, 25 feet in width, adjacent to any waterbody. [The Department believes that 25 feet is the appropriate buffer width to be protective of water quality. However, in situations that warrant additional flexibility, such as where lot sizes are exceptionally small or where the 25 ft buffer constitutes the majority of the available property, the municipality may reduce the buffer to 10 feet in width, with the additional requirement that a drop spreader be used for fertilizer application]

b. Commercial farm - a farm management unit producing agricultural or horticultural products worth $2,500 or more annually.

c. Fertilizer - means a fertilizer material, mixed fertilizer or any other substance containing one or more recognized plant nutrients, which is used for its plant nutrient content, which is designed for use or claimed to have value in promoting plant growth, and which is sold, offered for sale, or intended for sale.

d. Impervious Surface - a surface that has been covered with a layer of material so that it is highly resistant to infiltration by water. This term shall be used to include any highway, street, sidewalk, parking lot, driveway, or other material that prevents infiltration of water into the soil.

e. Person - any individual, corporation, company, partnership, firm, association, or political subdivision of this State subject to municipal jurisdiction.

f. Phosphorus fertilizer - any fertilizer that contains phosphorus, expressed as P_2O_5, with a guaranteed analysis of greater than zero; except that it shall not be considered to include animal (including human) or vegetable manures, agricultural liming materials, or wood ashes that have not been amended to increase their nutrient content.

g. Soils Test - a technical analysis of soil conducted by an accredited soil-testing laboratory following the protocol for such a test established by Rutgers Cooperative Research and Extension.

h. Waterbody - a surface water feature, such as a lake, river, stream, creek, pond, lagoon, bay or estuary.

SECTION IV. Prohibited Conduct:

No person may do any of the following:

a) Apply fertilizer when a runoff producing rainfall is occurring or predicted and/or when soils are saturated and a potential for fertilizer movement off-site exists.

b) Apply fertilizer to an impervious surface. Fertilizer inadvertently applied to an impervious surface must be swept or blown back into the target surface or returned to either its original or another appropriate container for reuse.

c) Apply fertilizer within the buffer of any waterbody.

d) Apply fertilizer more than 15 days prior to the start of or at any time after the end of the recognized growing season **[insert season applicable to municipality as identified by the USDA Plant Hardiness Zones. USDA Plant Hardiness Zones mapping can be found in *The Standards for Soil Erosion and Sediment Control in New Jersey, July 1999*. The growing seasons are identified as follows: Zones 5b and 6a (northwestern New Jersey) - March 15 to October 31; Zone 6b (northeastern, central and part of southern New Jersey) – March 1 to November 15; Zones 7a and 7b (Atlantic Coastal area and southwestern New Jersey) – February 1 to November 30. Refer to USDA Plant Hardiness Zone mapping for more information]**.

SECTION V. Phosphorus Fertilizer Application

No person may do the following:

a) Apply phosphorus fertilizer in outdoor areas except as demonstrated to be needed for the specific soils and target vegetation in accordance with a soils test and the associated annual fertilizer recommendation issued by Rutgers Cooperative Research and Extension.

b) Exceptions

1. Application of phosphorus fertilizer needed for

a. establishing vegetation for the first time, such as after land disturbance, provided the application is in accordance with the requirements established under the

Soil Erosion and Sediment Control Act, N.J.S.A. 4:24-39 et seq. and implementing rules,

b. re-established or repairing a turf area.

2. Application of phosphorus fertilizer that delivers liquid or granular fertilizer under the soils surface, directly to the feeder roots.
3. Application of phosphorus fertilizer to residential container plantings, flowerbeds, or vegetable gardens.

SECTION VI. Enforcement:

This ordinance shall be enforced by the **[Police Department and/or other Municipal Officials]** of **[insert name of municipality]**.

SECTION VII. Violations and Penalties:

Any person(s) found to be in violation of the provisions of this ordinance shall be subject to a fine not to exceed **[insert amount]**.

SECTION VIII. Severability:

Each section, subsection, sentence, clause and phrase of this Ordinance is declared to be an independent section, subsection, sentence, clause and phrase, and the finding or holding of any such portion of this Ordinance to be unconstitutional, void, or ineffective for any cause, or reason, shall not affect any other portion of this Ordinance.

SECTION IX. Effective date:

This Ordinance shall be in full force and effect **[insert appropriate language for ordinance adoption in municipality such as: from and after its adoption and any publication as may be required by law]**.

ALL OF WHICH IS ADOPTED this ___day of _____, 2___, by the _____.